LCD Control System Based on STC12C5A60S2

Kefei Wang[1, a *] and Xiaoze Song [1, b]

[1] Department of Technology, Jilin Business and Technology College, Changchun 130507, China

[a] wangkefei888@sina.com, [b] c1316478233@qq.com

Keywords: STC12C5A60S2; LCD; VGA Controller; SD Card Module

Abstract: This paper designs and implements a LCD control system with STC12C5A60S2 as the main control chip. System uses STC12C5A60S2 as central processor, , STC12C5A60S2 is used to control the VGA controller to drive the LCD, SD card module can store images and characters, enriched the contents of the LCD display， the whole system has a cost advantage compared with the computer controlled LCD screens, the cost is blew one hundred Yuan, it can be widely used in daily life, the advantage of high cost-effective, it created the low price MCU controlled the application of LCD. it has the innovation of technology and application.

1. Introduction

LCD is widely used to news release, commercial, transportation, culture, entertainment, sports, aerospace and military exercises and other fields, has become an important equipment of social informatization[1], after years of development, the technology is already relatively mature, the price of the LCD display is more and more low, the frequency of the update also accelerated, produced a lot of features in good second-hand display, to display secondary development, in addition to the computer, using single-chip microcomputer control LCD screen with the low cost, become the future trend of application of party, such as the hotel gate at the gate of the hotel menu prompt, and even bus stops bus information prompt.

In this paper, STC12C5A60S2 is used to control the VGA controller to drive the LCD, which can control the display content. SD card module is used to store pictures, characters and other large-capacity information. VGA controller is responsible for transmitting display data to the LCD. Designed to meet the needs of a variety of scenarios of the intelligent LCD screen, according to the needs of the user to replace the display interface, can also display the user design pictures, or the specified background. Users can modify the content to meet the needs of a variety of occasions.

2. The Hardware Design of LCD Control System.

The hardware of the LCD control system is shown in figure 1: it is mainly composed of the main control chip, SD card module, display and VGA. From the perspective of system function and cost performance, this paper demonstrates the hardware scheme of each module and designs the hardware circuit according to the selected scheme.

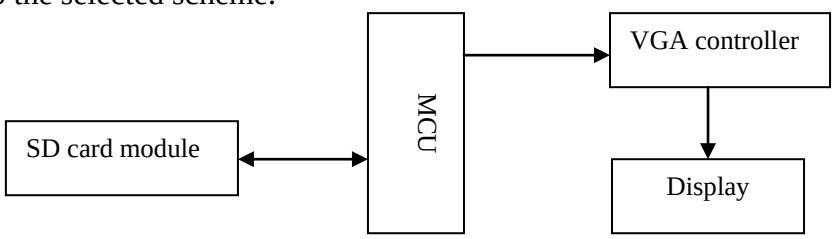

Figure 1. Hardware block diagram of LCD control system

Copyright © (2019) Francis Academic Press, UK DOI: 10.25236/icme.2019.031

3. Hardware Selection.

MCU Selection. The optional MCU includes FPGA, Arduino, STM32, STC89C52, STC15 and STC12. Among the optional chips, 89C52 has low memory and slow IO output frequency. FPGA and STM32 are both chips with high processing power, high cost in price, complex operation and long learning cycle. Arduino can be used for IO port with less IO port expansion.

We chose STC12C5A60S2 of STC12 series, which has a fast output speed, 60k built-in memory, a multichannel ADC, PWM multiplexed IO port, and a double serial port[2]. The price is also relatively affordable. So, STC12C5A60S2 is the best choice.

SD Card Storage Image Format. It uses BMP format image which belongs to bitmap, the same type of vector map. Vector graph, also known as vector graph, is a kind of graph depicted according to geometric features, using points, lines, planes and other elements for drawing. Vector drawings can only represent regular lines, geometric shapes, and can only be generated by software.

Bitmap images, also known as bitmap images (pixel images), are luminous points that store color values in binary code. Each point is a pixel. These points have multiple colors, arranged in matrix form.

Vector drawing can only represent regular geometric features, not irregular objects such as landscapes, figures and landscapes.

Bitmaps are pixels, rich in color, and can realistically represent these irregular objects. We designed to store only pixels, so we chose bitmaps instead of vector images.

Display Selection. Display is generally divided into CRT, LCD, LED. CRT displays are large in size, low in refresh rate, high in radiation and low in color. LED display screen can display a low definition, suitable for large areas of display scene[3,4], in the same definition, LED screen price is high.

This design chooses the liquid crystal display screen of LCD, its radiation amount is relatively small, color is very rich, volume is thin and thin, definition is high, refresh rate is high, cost is moderate.

4. Hardware Circuit Design.

Bluetooth driver: It uses Bluetooth device and App for data transmission. When using Bluetooth module, a Bluetooth driver needs to be written. This can be better to send and receive data, call. There is text transmission in this design, so it is not a traditional single-byte transceiver. So you need to write a Bluetooth driver. The Bluetooth program diagram is shown in figure 2. The procedure of Bluetooth is as follows:

VGA Controller Interface. It uses font-turbo-vga640480 controller. It mainly consists of XILINX SPARTAN series chips and peripheral circuit composed of a powerful display controller. Peripheral circuit including: 25P32V6P flash memory (large capacity 32M memory), 50MHZ external high-speed crystal oscillator, 74LCV245AD (eight-way bus transceiver), EM638165TS memory (ETRON) and other components [5,6].

The input end of VGA module is 30 pins, and the output end is VGA 15pin interface[7]. The pin diagram of the input terminal is shown in figure 3.

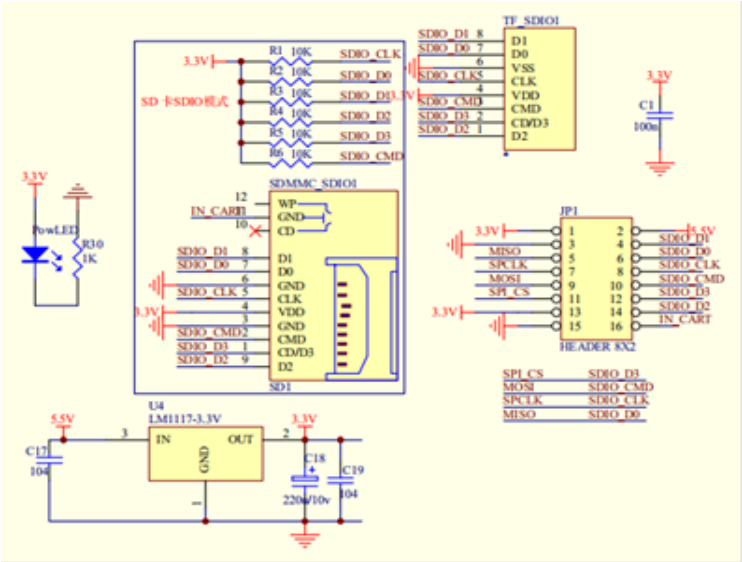

Figure 2. SD card socket module design circuit

Figure 3. Input pin diagram of VGA module

5. SD Card Module Software Design of LCD Control System.

SD card module adopts SPI communication mode and USES four lines: CLK, MOSI, MISO and CS. When reading data, you need to send a read instruction first, and then wait for a reply, which is followed by the data, and finally the check bit [8,9].

Before the read operation, the SD card needs to send reset instruction CMD0, SPI mode instruction CMD1, and then receive data reading instruction CMD11. In addition, you need to know what the base address of the file in SD is. When reading data, you need to know the specific address to read the data, otherwise the read out is invalid data.

The base address of the SD card file is queried by software called Winhex. It is a hexadecimal file manager that can be used to view some information about SD card[10]. SD card module adopts SPI communication mode and uses four lines: CLK, MOSI, MISO and CS. SPI read data operation of SD card is shown in figure 4.

When reading data, you need to send a read instruction first, and then wait for a reply, which is followed by the data, and finally the check bit.

Before the read operation, the SD card needs to send reset instruction CMD0, SPI mode instruction CMD1, and then receive data reading instruction CMD11. In addition, you need to know what the base address of the file in SD is. When reading data, you need to know the specific address to read the data, otherwise the read out is invalid data.

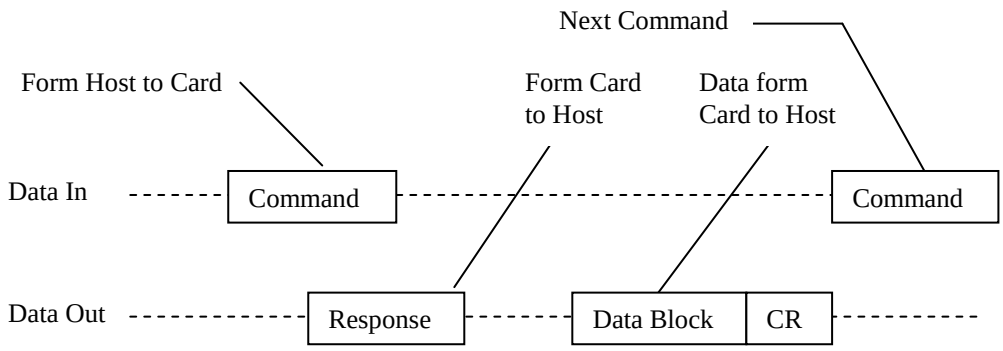

Figure.4 SPI read data operation of SD card

6. Conclusion

For the overall functional test, the corresponding pins should be connected according to the above pin instructions. Be sure to check the hardware connection several times after the connection is complete to make sure that the test failure is not a problem with the connection, so that you can find the problem. In the process of test, met many problems, such as SD card cannot be normal reading, receives the App to send data, according to the word of each cover, read SD card image data, display is garbled or pictures of color is not normal, the problem such as image is inverted, the problems encountered in the process of testing, after repeated debug to formulate solutions.

Acknowledgements

This work was financially supported by Jilin Provincial Education Department's Planning Project fund (JJKH20180517KJ).

References

[1]. Information on https://wenku.baidu.com/view/38bfd18fba1aa8114431d9eb.html.

[2]. Information on https://wenku.so.com/d/34bfe5856d465a47775ffa5031953aef.

[3]. Zupei Huang. Introduction to liquid crystal display -- principle of display (ii)[J]. Journal of electronic test,2001. No.2, P172-177.

[4]. Information on https://max.book118.com/html/2017/0710/121520667.shtm.

[5]. Xiaoze Song. Intelligent Display Screen -- Design of APP Control[D].Jilin:Jilin Business and Technology College.2019.

[6]. Information on https://www.docin.com/p-2058789729.html.

[7]. Lei Duan. VGA display system based on FPGA [J]. World Electronic Components. No.9. 2007, P102-105.

[8]. Information on https://wenku.so.com/d/5bb1bb343cd8821f6a4ed68e58f11866.

[9]. Information on https://wenku.so.com/d/45b6c0912a36c056cbc05a502000e2c0.

[10]. Information on https://wenku.so.com/d/b935d5124d990ebfc8b59f26a21b501e.